Pipe Fittings

Requirements and Test Methods

© VdS Schadenverhütung GmbH
Vervielfältigungen/Veröffentlichungen – auch für innerbetriebliche Verwendung – nicht gestattet
Heruntergeladen von IP 216.73.216.68 am 25.11.2026 - 12:10

Publisher and publishing house: VdS Schadenverhütung GmbH

Amsterdamer Str. 172-174
50735 Köln, Germany
Phone: +49 221 77 66 0; Fax: +49 221 77 66 341

Copyright by VdS Schadenverhütung GmbH. All rights reserved.

© VdS Schadenverhütung GmbH
Vervielfältigungen/Veröffentlichungen – auch für innerbetriebliche Verwendung – nicht gestattet
Heruntergeladen von IP 216.73.216.68 am 25.11.2026 - 12:10

Water Extinguishing Systems

Pipe Fittings

Requirements and Test Methods

This document is binding only if its use has been agreed on a case-by-case basis. Otherwise, any consideration of this document is non-binding. An agreement for application of this document is entirely optional. On a case-by-case basis, third parties may also accept, at their discretion, other requirements that do not comply with this document.

In order to avoid impairing the understanding of the text, VdS Schadenverhütung uses the generic masculine throughout. This expressly does not imply any preference or other evaluation of the male, female or other sex.

Content

1 General 5
1.1 Scope 5
1.2 Validity 5
2 Definitions 5
3 Normative references 5
4 Classification 6
5 Requirements 6
5.1 General 6
5.1.1 Test conditions 6
5.1.2 Test modules and test samples 6
5.2 Technical documentation 8
5.2.1 Marking 8
5.2.2 Resistance to corrosion and ageing 9
5.3 Compliance test 9
5.4 Performance characteristics 9
5.4.1 Pressure test 9
5.4.2 Pressure test under bending stress 10
5.4.3 Water hammer test 10
5.4.4 Leakage test 10
5.5 Other requirements 10

© VdS Schadenverhütung GmbH
Vervielfältigungen/Veröffentlichungen – auch für innerbetriebliche Verwendung – nicht gestattet
Heruntergeladen von IP 216.73.216.68 am 25.11.2026 - 12:10

6 Tests 10
6.1 General 10
6.1.1 Test conditions 10
6.1.2 Test modules and test samples 10
6.2 Technical documentation 10
6.2.1 Marking 11
6.2.2 Resistance to corrosion and ageing 11
6.3 Compliance test 11
6.4 Performance characteristics 11
6.4.1 Pressure test 11
6.4.2 Pressure test under bending stress 11
6.4.3 Water hammer test 12
6.4.4 Leakage test 12
6.5 Other tests 12
Annex A Test sample assembly and test equipment for pipe fittings 13
Annex B Dimensions for grooved connections 16

© VdS Schadenverhütung GmbH
Vervielfältigungen/Veröffentlichungen – auch für innerbetriebliche Verwendung – nicht gestattet
Heruntergeladen von IP 216.73.216.68 am 25.11.2026 - 12:10

1 General

1.1 Scope

These Guidelines specify requirements and test methods for pipe fittings with groove, flange and threaded connections made of ductile cast iron in nominal sizes DN 25 to DN 300 for use in pipework of water extinguishing systems according to VdS CEA 4001, VdS 2108, VdS 2109 and VdS 2395-1 with an allowable pressure of up to 25 bar.

These Guidelines are not applicable to special fittings such as tapping saddles.

Note 1: The combination of pipe fittings tested according to these Guidelines with machined grooves according to Annex B and approved pipe couplings is released based on a manufacturer's declaration by the fitting manufacturer.

Note 2: The combination of pipe fittings with cast grooves tested according to these Guidelines and approved pipe couplings of other manufacturers can be released based on a confirmation by the coupling manufacturer relating to the combination and, if necessary, testing with test samples.

1.2 Validity

These Guidelines come into force immediately. They replace the corresponding regulations in VdS 2100 Guidelines for water exinguishing systems (1988-05) as well as VdS 2100-30 : 2011-05. The transition period is 4 years from the date of coming into force.

2 Definitions

allowable pressure: pressure specified by the client for which the test is to be performed; based on this value the test pressures are calculated

cast groove: groove of the fitting which is used after the casting process without further finishing

mechanically machined groove: groove of the fitting which is defined by machined finishing after the casting process

pipe end: side of the pipe which is intended to receive the pipe connection element; it shall correspond to the specifications of the manufacturer of the pipe connection element

3 Normative references

These Guidelines contain dated and undated references to other regulations. References are made in the appropriate sections, the titles are listed below. For dated references, subsequent amendments to or revisions of any of these publications apply to these Guidelines only when incorporated in them by amendment or revision. For undated references the latest edition of the publication referred to applies.

VdS 2108	Guidelines for foam extinguishing systems – Planning and installation
VdS 2109	Guidelines for water spray systems – Planning and installation
VdS 2344	Procedure for the testing, approval, certification and conformity assessment of products and systems for fire protection and security technologies

© VdS Schadenverhütung GmbH
Vervielfältigungen/Veröffentlichungen – auch für innerbetriebliche Verwendung – nicht gestattet
Heruntergeladen von IP 216.73.216.68 am 25.11.2026 - 12:10

VdS 2395-1	Guidelines for semi-stationary extinguishing systems – Planning and installation; Part 1: Semi-stationary water spray systems
VdS CEA 4001	Guidelines for sprinkler systems – Planning and installation

4 Classification

There is no classification of the fittings covered by this document.

5 Requirements

5.1 General

5.1.1 Test conditions

The tests are conducted at a temperature of (25 ± 10) °C unless specified otherwise for a specific test.

The tolerance of all test parameters is ± 5 % unless specified otherwise.

5.1.2 Test modules and test samples

Pipe fittings of different geometry (among others T-piece, cross piece, bend, end cap, flange adapter, reducing fitting) and nominal size can be treated as one component series, provided that all fittings are made of the same material and have equivalent wall thicknesses within one nominal size.

For the testing of fittings the test modules (tests and test sequence for one test sample each) are determined according to Table 1.

Test module	**A**	**B**	**C**
6.3 Compliance	1	1	1
6.4.1 Pressure test		2	2
6.4.2 Pressure test under bending stress		3	3
6.4.3 Water hammer test		4	
6.4.4 Leakage test		5	

Table 1: Test modules and test sequence

Pipe fittings are tested in combination with an approved coupling type. For combinations with other approved coupling types additional tests according to test module C (see Table 1) may be required.

For approvals with pressures above 16 bar, a test sample assembly is tested in each ordered nominal size according to test module B.

For the approval of one single pipe fitting, testing is carried out according to test module B.

When testing a series of pipe fittings, a test schedule with at least the following test modules and test samples is defined:

© VdS Schadenverhütung GmbH
Vervielfältigungen/Veröffentlichungen – auch für innerbetriebliche Verwendung – nicht gestattet
Heruntergeladen von IP 216.73.216.68 am 25.11.2026 - 12:10

a) 1 test sample of each component for test module A

b) 1 test sample assembly with bends and/or T-pieces of max. nominal size for test module B
   - if the series only comprises bends according to Figure A.2
   - if the series also comprises T-pieces according to Figure A.1

c) 1 test sample assembly with bends and/or T-pieces of minimum nominal size for test module B
   - if the series only comprises bends according to Figure A.2
   - if the series also comprises T-pieces according to Figure A.1

d) 1 test sample assembly with bends and/or T-pieces of medium nominal size for test module B
   - if the series only comprises bends according to Figure A.2
   - if the series also comprises T-pieces according to Figure A.1

e) 1 test sample assembly with bends and/or T-pieces DN 200, if ordered and not included in b), c) and d) for test module B
   - if the series only comprises bends according to Figure A.2
   - if the series also comprises T-pieces according to Figure A.1

In addition, if the series also comprises flange adapters:

f) 1 test sample assembly of maximum nominal size for test module B according to Figure A.3

g) 1 test sample assembly of minimum nominal size for test module B according to Figure A.3

h) 1 test sample assembly of medium nominal size for test module B according to Figure A.3

i) 1 test sample assembly DN 200, if ordered and not included in f), g) and h) for test module B according to Figure A.3

In addition, if the series also comprises reducing pieces:

j) 1 test sample assembly of maximum nominal size and maximum reduction level for test module B according to Figure A.4

k) 1 test sample assembly of minimum nominal size and maximum reduction level for test module B according to Figure A.4

l) 1 test sample assembly of medium nominal size and maximum reduction level for test module B according to Figure A.4

m) 1 test sample assembly DN 200, if ordered and not included in j), k) and l) for test module B according to Figure A.4

The test pipes and couplings shall be capable of withstanding the pressures and bending moments to be applied in the tests.

The pipe couplings used for the test sample assembly shall be VdS-approved for an allowable pressure ≥ the allowable pressure of the pipe fittings.

The test pipes shall comply with the specifications in Table 2.

© VdS Schadenverhütung GmbH
Vervielfältigungen/Veröffentlichungen – auch für innerbetriebliche Verwendung – nicht gestattet
Heruntergeladen von IP 216.73.216.68 am 25.11.2026 - 12:10

Nominal size DN	Nominal size Inch	Outer diameter in mm	Wall thickness in mm Allowable pressure up to 12.5 bar	Minimum wall thickness in mm Allowable pressure up to 16 bar	Minimum wall thickness in mm Allowable pressure up to 25 bar
25	1 “	33.7	2.0	2.0	2.0
32	1 ¼ “	42.4	2.3	2.3	2.3
40	1 ½ “	48.3	2.3	2.3	2.3
50	2 “	60.3	2.3	2.3	2.6
65	2 ½ “	76.1	2.6	2.6	2.9
80	3 “	88.9	2.9	2.9	3.2
100	4 “	114.3	3.2	3.2	3.6
125	5 “	139.7	3.6	3.6	4.1
150	6 “	168.3	4	4.1	4.7
200	8 “	219.1	4.5	4.9	5.7
250	10 “	273.0	5	5.8	6.8
300	12 “	323.9	5.6	6.7	7.8

Table 2: Dimensions for pipe ends

In the nominal size range DN 25 to DN 300, the nominal sizes (DN) 25, 32, 40, 50, 65, 80, 100, 125, 150, 200, 250 and 300 are permissible.

5.2 Technical documentation

The following documents are required:

a) manufacturing documents:
   - component drawing
     The marking according to 5.2.1 shall be documented in the drawings.
     If this marking is coded, the drawings shall document the meaning of the codes.

b) installation instructions for the application of the pipe fittings in fixed water extinguishing systems, which summarise all information relevant for the user and contain at least the following information:
   - description and dimensions of the pipe fittings
   - description of the groove dimensions
   - applicable pipe couplings

c) list of documents (with designation, drawing number, revision state, date), which contains all documents required above (each with designation, drawing number, revision state and date)

5.2.1 Marking

Pipe fittings shall be marked with the following information:

- name or label of manufacturer/supplier
- nominal size
- nominal outer diameter in mm of the pipe outer diameter belonging to the nominal size according to Table B.1
- type designation

© VdS Schadenverhütung GmbH
Vervielfältigungen/Veröffentlichungen – auch für innerbetriebliche Verwendung – nicht gestattet
Heruntergeladen von IP 216.73.216.68 am 25.11.2026 - 12:10

– production date, period or batch
– manufacturing site, if the fitting is produced in parallel in several manufacturing sites or if the manufacturing site is changed
– manufacturing process, if the fitting is produced in parallel in several manufacturing processes/techniques or if the manufacturing process/technique is changed
– marking according to VdS 2344 as VdS-approved

This marking shall be undetachable, non-combustible, permanent and clearly legible in the installed condition.

Marking by means of adhesive foils or similar is not permitted.

5.2.2 Resistance to corrosion and ageing

Corrosion and ageing shall not adversely affect the performance characteristics of the pipe fittings.

VdS reserves the right to carry out additional tests after informing the client accordingly.

5.3 Compliance test

The test samples shall be in accordance with the technical documentation as specified in 5.2 and comply with the scope of these Guidelines.

5.4 Performance characteristics

The client shall specify the allowable pressure. The allowable pressure shall be at least 10 bar.

The component surfaces (inside and outside) shall be provided with corrosion protection.

The client shall specify the couplings which he intends to use in combination with the pipe fittings.

If this also applies to couplings from other manufacturers, the client shall

– in the case of fittings with cast grooves, provide a confirmation from the coupling manufacturer of the combination of pipe fitting - coupling
– for fittings with mechanically machined grooves according to Annex B, provide a corresponding manufacturer's declaration

Note: See also notes 1 and 2 in 1.1.

5.4.1 Pressure test

The test sample assembly shall hold together safely during and after the test. There shall be no visible signs of

– leakage
– impermissible plastic deformation or rupture of the material
– sliding of the couplings on the pipe or on the fitting after the test pressure has been reached or
– swelling out of the sealing element

© VdS Schadenverhütung GmbH
Vervielfältigungen/Veröffentlichungen – auch für innerbetriebliche Verwendung – nicht gestattet
Heruntergeladen von IP 216.73.216.68 am 25.11.2026 - 12:10

5.4.2 Pressure test under bending stress

The test sample assembly shall hold together safely during and after the test. There shall be no visible signs of

– leakage
– impermissible plastic deformation or rupture of the material
– swelling out of the sealing element

5.4.3 Water hammer test

The test sample assembly shall hold together safely during and after the test. There shall be no visible signs of

– leakage
– impermissible plastic deformation or rupture of the material
– swelling out of the sealing element

5.4.4 Leakage test

The test sample assembly shall not show any signs of leakage.

5.5 Other requirements

VdS reserves the right to verify additional requirements after informing the client accordingly, if, for example, special designs or new manufacturing processes make this necessary.

6 Tests

6.1 General

6.1.1 Test conditions

Unless otherwise stated, the test conditions listed in 5.1.1 shall be complied with in each test.

The pipe ends supplied by the manufacturer shall be checked for conformity with the scope of these Guidelines and the requirements of 5.1.

The test sample assembly, consisting of pipe fitting(s), pipe couplings and test pipes, shall be installed in accordance with the manufacturer's installation instructions.

6.1.2 Test modules and test samples

The test samples shall pass through the respective test modules according to 5.1.2 and meet the requirements specified therein.

6.2 Technical documentation

The technical documentation submitted by the manufacturer is reviewed and checked for compliance with the requirements of 5.2.

© VdS Schadenverhütung GmbH
Vervielfältigungen/Veröffentlichungen – auch für innerbetriebliche Verwendung – nicht gestattet
Heruntergeladen von IP 216.73.216.68 am 25.11.2026 - 12:10

6.2.1 Marking

By visual inspection the marking is evaluated and checked for completeness and compliance with the requirements of 5.2.1.

If necessary, the following test is carried out after informing the client accordingly:

The test sample is submerged in tap water (ambient temperature) for 5 minutes once a day for 10 consecutive working days. Each time the test sample is removed from the water, at least the area of the marking is rubbed dry with a clean and dry cotton or paper cloth (10 rubs in both directions; force on marked surface 10N to 20N). The marking shall not become loose or smeared or leave deposits on the cloth. Then the marking of the same test sample is covered with mineral oil-based lubricant and left in this condition for 24 h at ambient temperature. Subsequently, the lubricant is removed from the test sample using a clean and dry cotton or paper cloth.

6.2.2 Resistance to corrosion and ageing

By review of the documentation and, if necessary, inspection of the test samples, it is determined whether the requirements of 5.2.2 are complied with or whether further corrosion and aging resistance tests are necessary.

6.3 Compliance test

In a visual and dimensional inspection it is checked whether the test samples correspond to the description in the technical documentation and whether they meet the requirements of these Guidelines which can be checked in this context.

6.4 Performance characteristics

6.4.1 Pressure test

The test sample assembly is mounted to the test equipment in accordance with Annex A, Figure A.1, Figure A.2, Figure A.3 or Figure A.4, depending on the component to be tested.

Subsequently, the test sample assembly is completely filled with water and subjected to a test pressure equal to 4 times the allowable pressure. The test pressure is held for 10 minutes. Afterwards, the test sample assembly is relieved of pressure.

The requirements according to 5.4.1 shall be met.

6.4.2 Pressure test under bending stress

The couplings of the test sample assembly are retightened on the pressureless test sample assembly still filled with water. Then the test sample assembly is subjected to a test pressure of 4 times the allowable pressure.

Subsequently, test force F is applied in accordance with Annex A, Figure A.5 by extending a hydraulic piston to generate the bending moment according to Table 3.

© VdS Schadenverhütung GmbH
Vervielfältigungen/Veröffentlichungen – auch für innerbetriebliche Verwendung – nicht gestattet
Heruntergeladen von IP 216.73.216.68 am 25.11.2026 - 12:10

Nominal size	External diameter in mm	Bending moment in Nm
25	33.7	350 [1)]
32	42.4	644 [1)]
40	48.3	858 [1)]
50	60.3	1,000
65	76.1	1,280
80	88.9	1,950
100	114.3	2,940
125	139.7	6,130
150	168.3	8,830
200	219.1	19,080
250	273.0	31,800
300	323.9	52,560

1) Alternatively, moments up to a maximum of 1,000 Nm can be applied, but not more than the bending moment at which the pipe begins to deform plastically.

Note: For reducing fittings the dimension of the smaller nominal size is applicable when determining the bending moment.

Table 3: Bending moments

6.4.3 Water hammer test

The test sample assembly as present from the test according to 6.4.2 is filled with water and subjected to sudden pressure (test medium water).

– number of cycles: 3,000 cycles

– test pressure: 25 bar above the allowable pressure

Before each water hammer, the pressure in the test sample assembly shall not exceed 3.5 bar.

The requirements of 5.4.3 shall be fulfilled.

6.4.4 Leakage test

After the test according to 6.4.3, the water is completely drained from the test sample assembly.

The test connection is then pressurised with air for 10 min and subjected to a test pressure equal to the allowable pressure, but not more than 10 to 12.5 bar, and checked for leaks with leak detection spray.

Afterwards the test sample assembly is relieved.

6.5 Other tests

VdS reserves the right to carry out additional tests, e.g. due to special designs or new manufacturing methods, after informing the client accordingly.

© VdS Schadenverhütung GmbH
Vervielfältigungen/Veröffentlichungen – auch für innerbetriebliche Verwendung – nicht gestattet
Heruntergeladen von IP 216.73.216.68 am 25.11.2026 - 12:10

Annex A Test sample assembly and test equipment for pipe fittings

Figure A.5 shows an example of a test equipment. Other types of test equipment can be used as far as the dimensions specified in Figure A.5 are observed.

In case of component series which do not include all fittings or which include additional fittings it can be necessary to adapt the test sample assembly. The dimensions specified in Figure A.5 shall be observed.

Force F can also be applied from below to the test sample in case the test sample is firmly clamped onto the counter bearing (180 mm in Figure A.5).

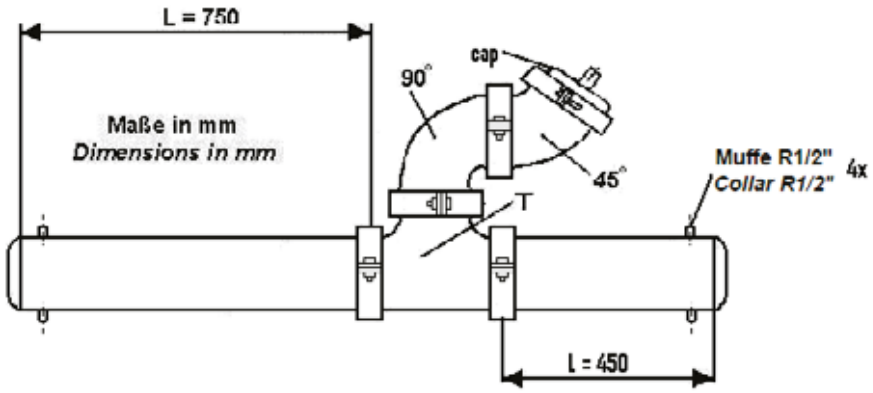

Muffe mit Innengewinde (BSP) R ½“ (DN 15), zylindrisch (nicht konisch!)
Bushing with female whitworth pipe thread (BSP) R ½“ (DN 15), cylindric (not conic!)

Figure A.1: Test sample assembly for pipe fittings – series (T-piece)

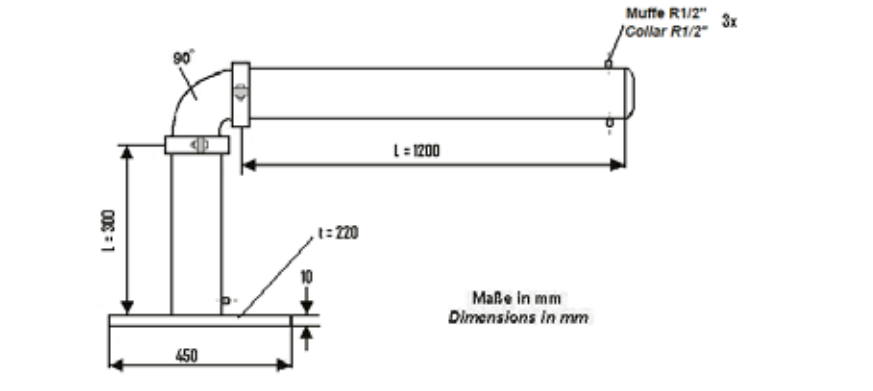

Muffe mit Innengewinde (BSP) R ½“ (DN 15), zylindrisch (nicht konisch!)
Bushing with female whitworth pipe thread (BSP) R ½“ (DN 15), cylindric (not conic!)

Figure A.2: Test sample assembly for pipe fittings – 90° bend

© VdS Schadenverhütung GmbH
Vervielfältigungen/Veröffentlichungen – auch für innerbetriebliche Verwendung – nicht gestattet
Heruntergeladen von IP 216.73.216.68 am 25.11.2026 - 12:10

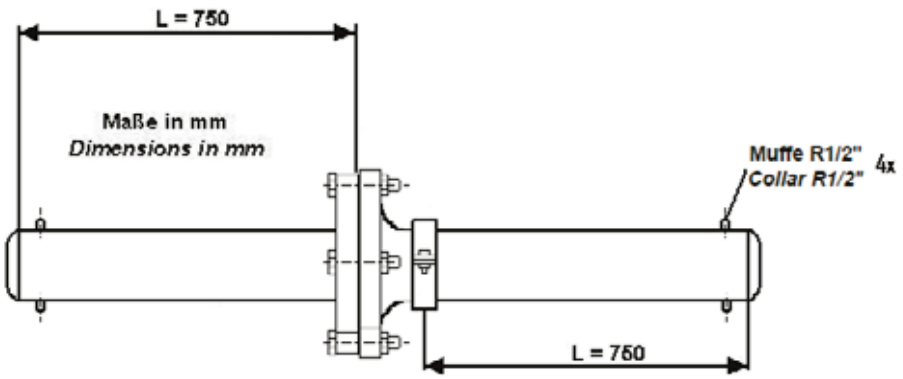

Muffe mit Innengewinde (BSP) R ½“ (DN 15), zylindrisch (nicht konisch!)
Bushing with female whitworth pipe thread (BSP) R ½“ (DN 15), cylindric (not conic!)

Figure A.3: Test sample assembly for pipe fittings – flange adapter

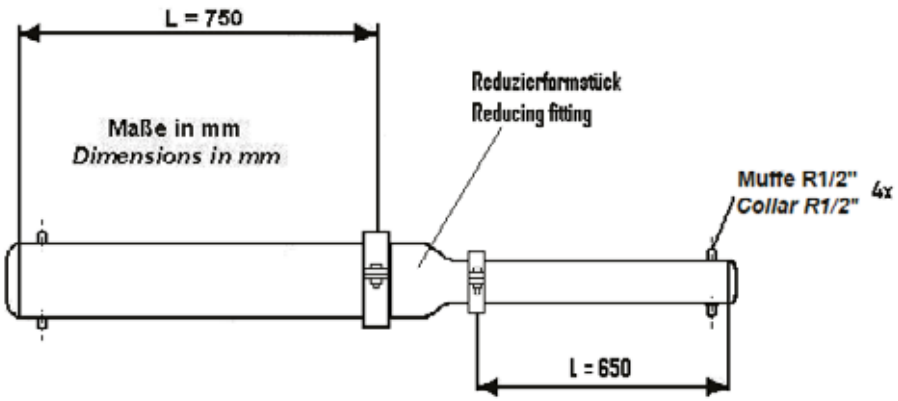

Muffe mit Innengewinde (BSP) R ½“ (DN 15), zylindrisch (nicht konisch!)
Bushing with female whitworth pipe thread (BSP) R ½“ (DN 15), cylindric (not conic!)

Figure A.4: Test sample assembly for pipe fittings – reducing piece

© VdS Schadenverhütung GmbH
Vervielfältigungen/Veröffentlichungen – auch für innerbetriebliche Verwendung – nicht gestattet
Heruntergeladen von IP 216.73.216.68 am 25.11.2026 - 12:10

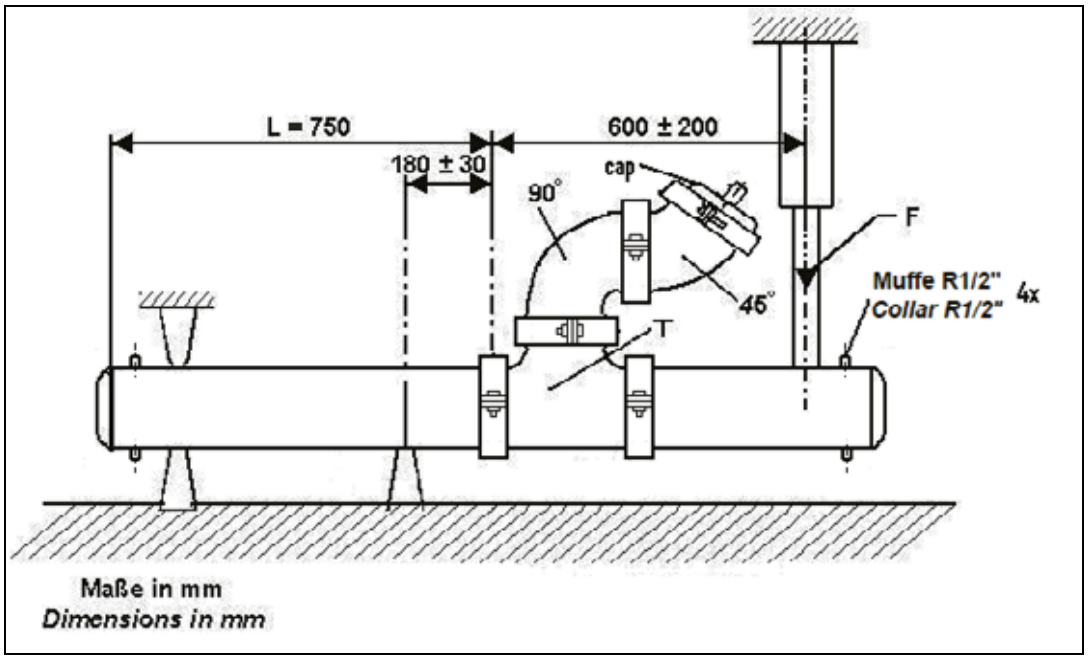

Figure A.5: Test equipment (dimensions/lever arms/clamping points)

© VdS Schadenverhütung GmbH
Vervielfältigungen/Veröffentlichungen – auch für innerbetriebliche Verwendung – nicht gestattet
Heruntergeladen von IP 216.73.216.68 am 25.11.2026 - 12:10

Annex B Dimensions for grooved connections

This Annex specifies the dimensions for grooved connections for use with pipe couplings for grooved pipe ends.

Valid for machined connections.

Nominal size		**Nominal outer diameter in mm**	**Outer diameter in mm**		**Pipe length up to groove in mm**	**Groove width in mm**	**Diameter at groove bottom in mm**	
			max.	**min.**	**± 0,76**	**± 0,76**	**max.**	**min.**
DN	25	33.7	33.73	33.07	15.87	7.92	30.23	29.85
DN	32	42.4	42.57	41.76	15.87	7.92	38.99	38.61
DN	40	48.3	48.74	47.78	15.87	7.92	45.09	44.70
DN	50	60.3	60.94	59.72	15.87	7.92	57.15	56.77
DN	65	76.1	76.85	75.35	15.87	7.92	72.26	71.80
DN	80	88.9	89.79	88.11	15.87	7.92	84.94	84.48
DN	100	114.3	115.44	113.51	15.87	9.52	110.08	109.58
DN	125	139.7	141.10	138.91	15.87	9.52	135.48	134.97
DN	150	168.3	169.85	167.49	15.87	9.52	163.95	163.40
DN	200	219.1	220.65	218.29	19.05	11.13	214.40	213.77
DN	250	273	274.62	272.26	19.05	12.70	268.27	267.59
DN	300	323.9	325.42	323.06	19.05	12.70	318.29	317.53

Note 1: Groove shoulder burr-free with ablation of max. 0.3 mm x 45°
Note 2: Groove bottom with radius up to max. 0.8 mm

Table B.1: Dimensions for grooved connections

© VdS Schadenverhütung GmbH
Vervielfältigungen/Veröffentlichungen – auch für innerbetriebliche Verwendung – nicht gestattet
Heruntergeladen von IP 216.73.216.68 am 25.11.2026 - 12:10